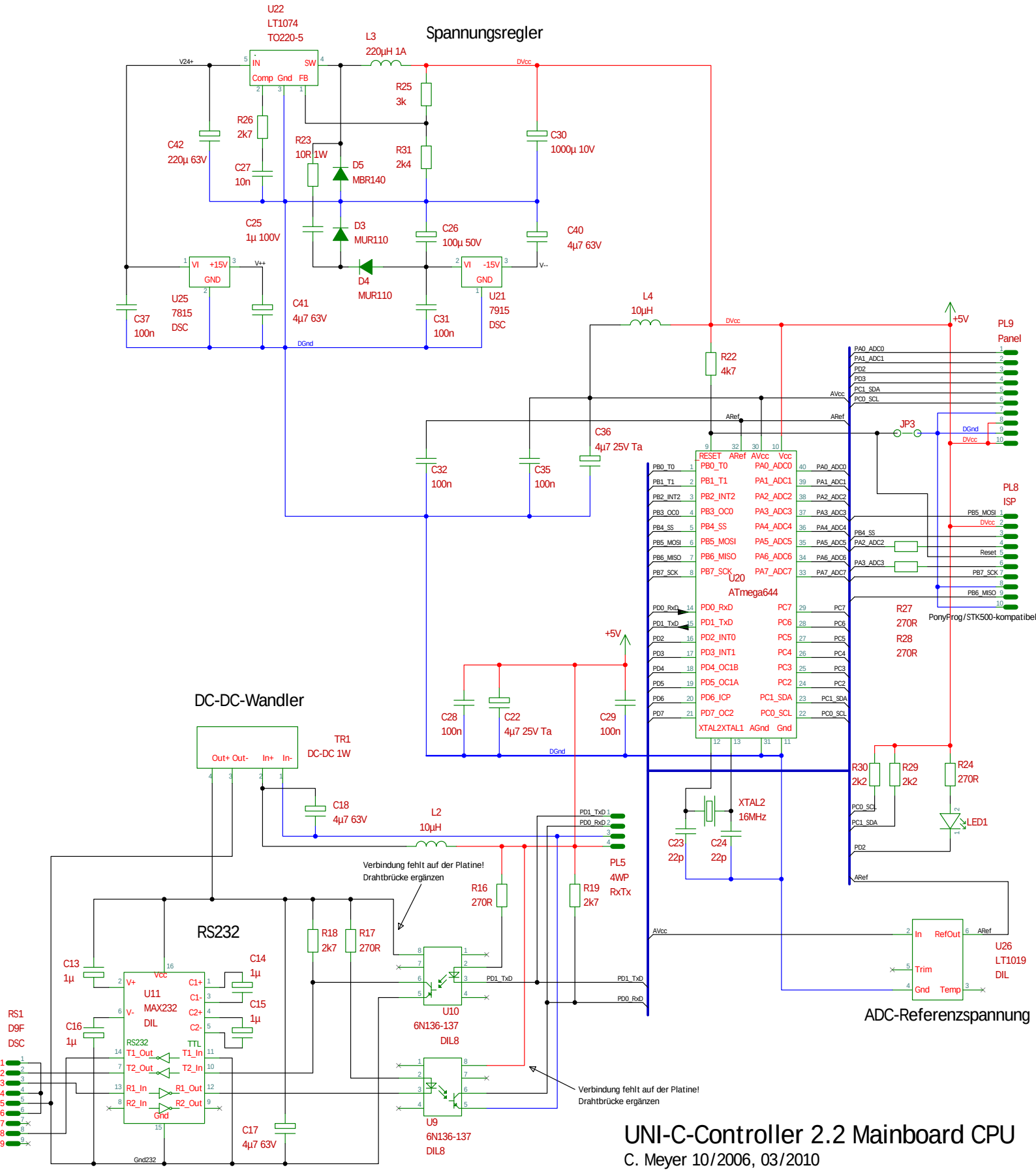

UNI-C-Controller 2.2 Mainboard CPU

C. Meyer 10/2006, 03/2010