Matrix-Schaltstufe 250V/10A 4x7 Crosspoint
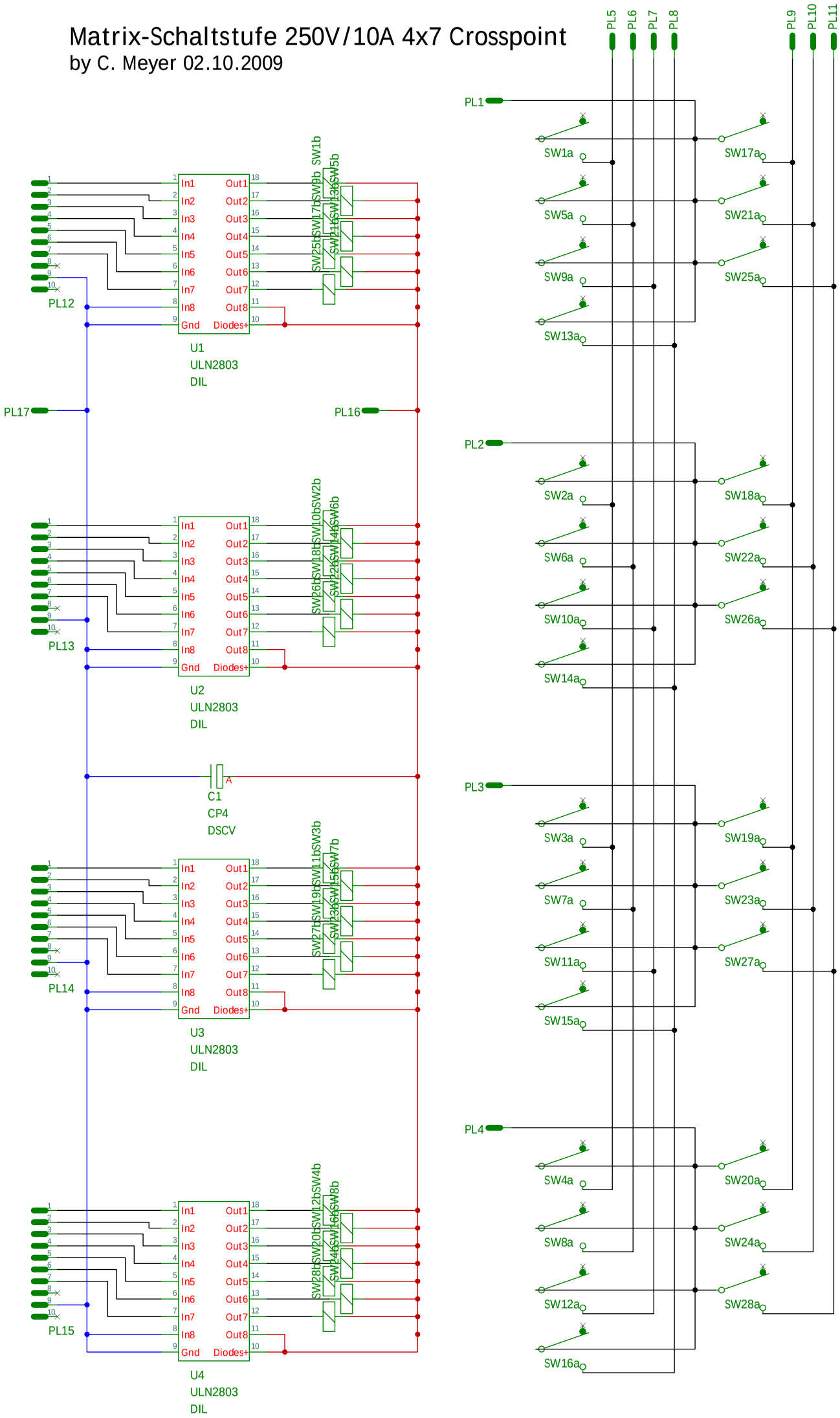
by C. Meyer 02.10.2009