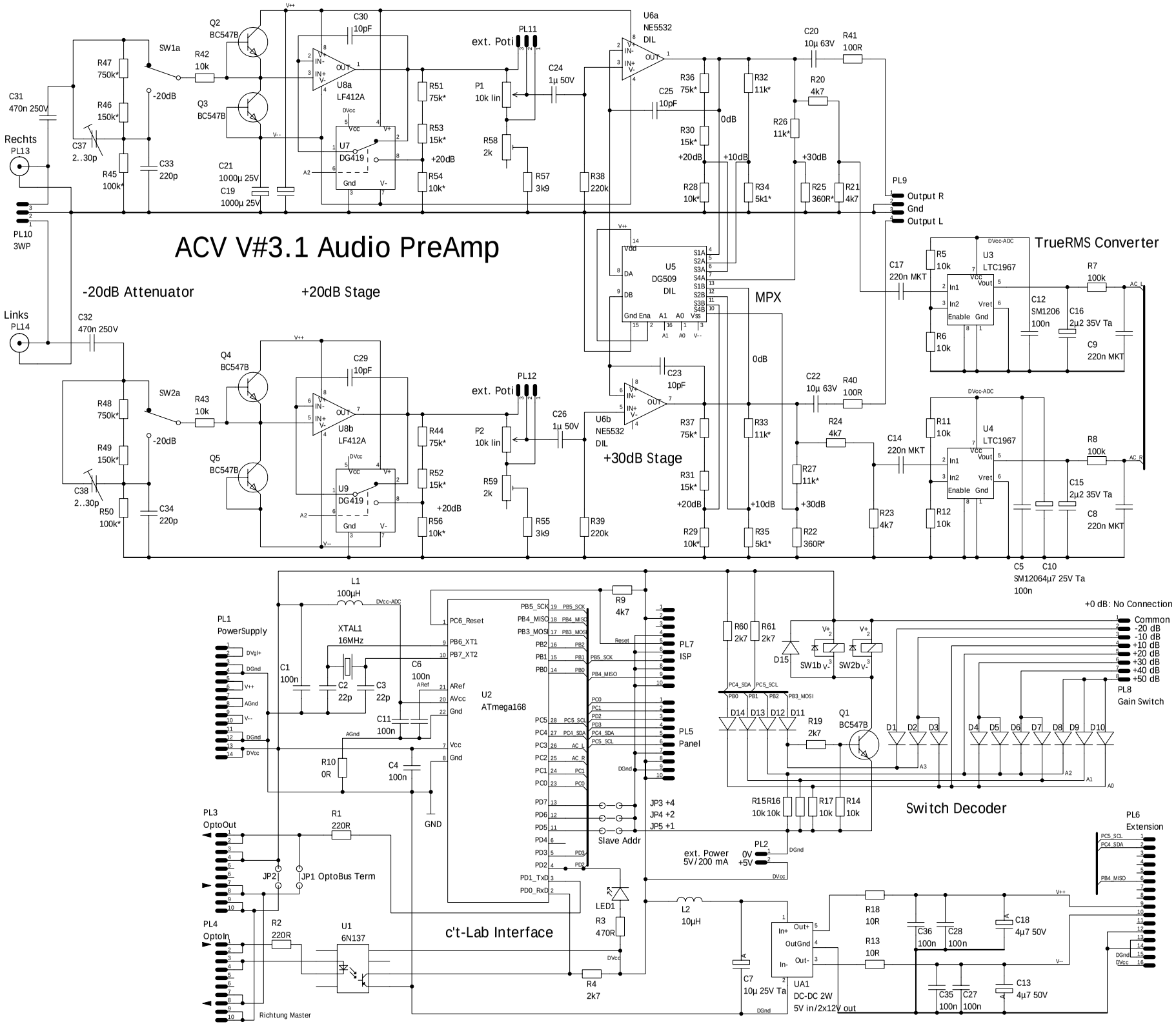
ACV V#3.1 Audio PreAmp
-20dB Attenuator
+20dB Stage
+30dB Stage
MPX
TrueRMS Converter
Switch Decoder
c't-Lab Interface
Rechts
Links
PL13
PL10
3WP
PL14
PL9
Output R
Gnd
Output L
PL11
ext. Poti
PL12
ext. Poti
U6a
NE5532
DIL
U6b
NE5532
DIL
U8a
LF412A
U8b
LF412A
U7
DG419
U9
DG419
U5
DG509
DIL
U3
LTC1967
U4
LTC1967
SW1a
SW2a
-20dB
0dB
+10dB
+20dB
+30dB
Q2
BC547B
Q3
BC547B
Q4
BC547B
Q5
BC547B
C31
470n 250V
C32
470n 250V
C37
2..30p
C38
2..30p
C33
220p
C34
220p
C21
1000µ 25V
C19
1000µ 25V
C30
10pF
C29
10pF
C24
1µ 50V
C26
1µ 50V
C25
10pF
C23
10pF
C20
10µ 63V
C22
10µ 63V
C17
220n MKT
C14
220n MKT
C12
SM1206
100n
C16
2µ2 35V Ta
C9
220n MKT
C15
2µ2 35V Ta
C8
220n MKT
C5
SM12064µ7 25V Ta
100n
C10
R41
100R
R40
100R
R7
100k
R8
100k
AC_L
AC_R
DVcc-ADC
+0 dB: No Connection
Common
-20 dB
-10 dB
+10 dB
+20 dB
+30 dB
+40 dB
+50 dB
PL8
Gain Switch
PL1
PowerSupply
L1
100µH
XTAL1
16MHz
C1
100n
C2
22p
C3
22p
C6
100n
C11
100n
C4
100n
R10
0R
R9
4k7
U2
ATmega168
PL7
ISP
PL5
Panel
JP3 +4
JP4 +2
JP5 +1
Slave Addr
PL3
OptoOut
R1
220R
JP2
JP1 OptoBus Term
PL4
OptoIn
R2
220R
U1
6N137
Richtung Master
LED1
R3
470R
R4
2k7
GND
L2
10µH
C7
10µ 25V Ta
UA1
DC-DC 2W
5V in/2x12V out
ext. Power
5V/200 mA
PL2
0V
+5V
R60
2k7
R61
2k7
D15
SW1b
SW2b
Q1
BC547B
R19
2k7
R15
10k
R16
10k
R17
10k
R14
10k
R18
10R
R13
10R
C36
100n
C28
100n
C18
4µ7 50V
C35
100n
C27
100n
C13
4µ7 50V
PL6
Extension