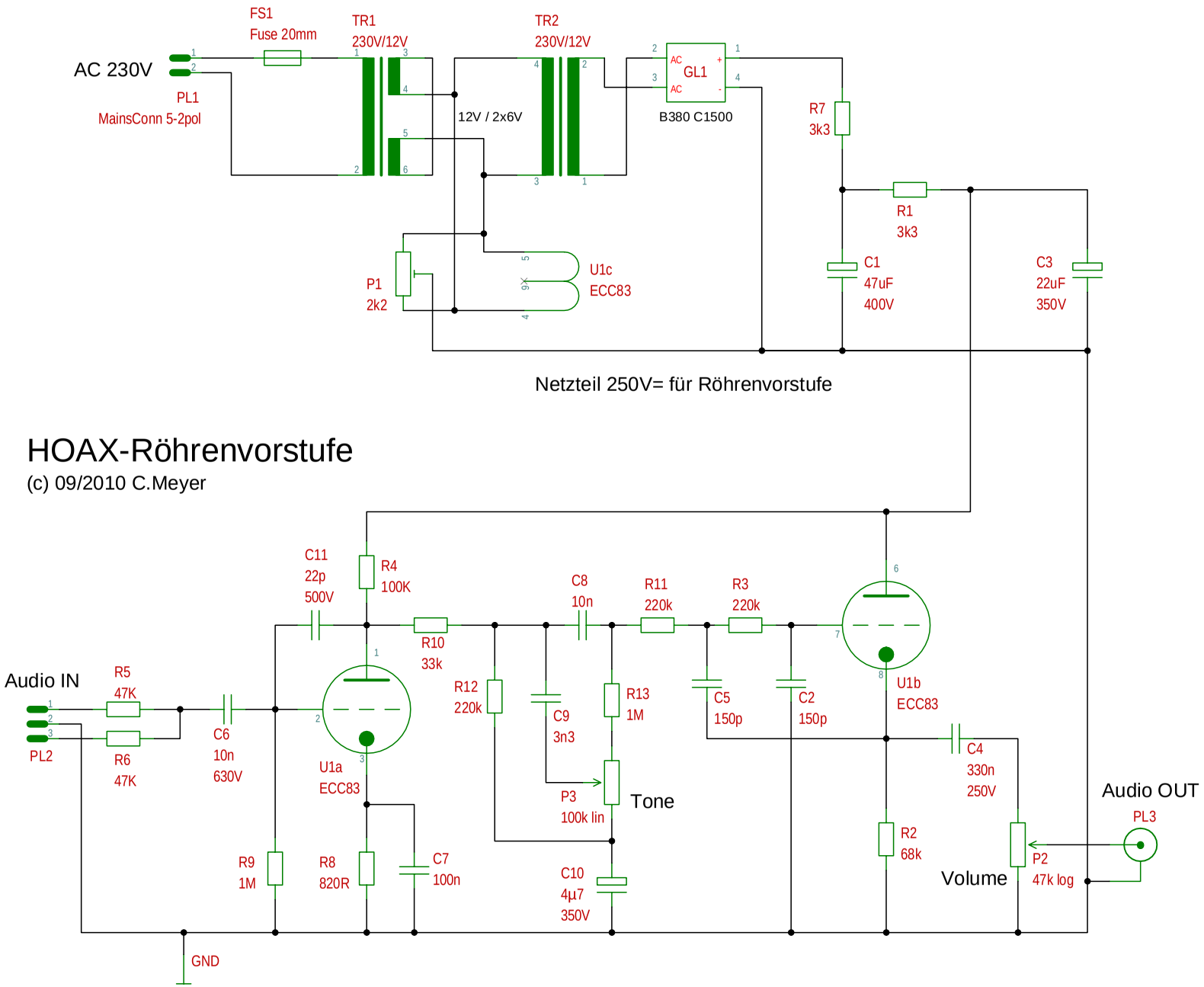
AC 230V
PL1
MainsConn 5-2pol
FS1
Fuse 20mm
TR1
230V/12V
12V / 2x6V
TR2
230V/12V
GL1
B380 C1500
R7
3k3
R1
3k3
C1
47uF
400V
C3
22uF
350V
P1
2k2
U1c
ECC83
Netzteil 250V= für Röhrenvorstufe
HOAX-Röhrenvorstufe
(c) 09/2010 C.Meyer
Audio IN
PL2
R5
47K
R6
47K
C6
10n
630V
C11
22p
500V
R4
100K
R10
33k
U1a
ECC83
R9
1M
R8
820R
C7
100n
R12
220k
C9
3n3
C8
10n
R13
1M
P3
100k lin
Tone
C10
4µ7
350V
R11
220k
R3
220k
C5
150p
C2
150p
U1b
ECC83
C4
330n
250V
R2
68k
P2
47k log
Volume
Audio OUT
PL3
GND