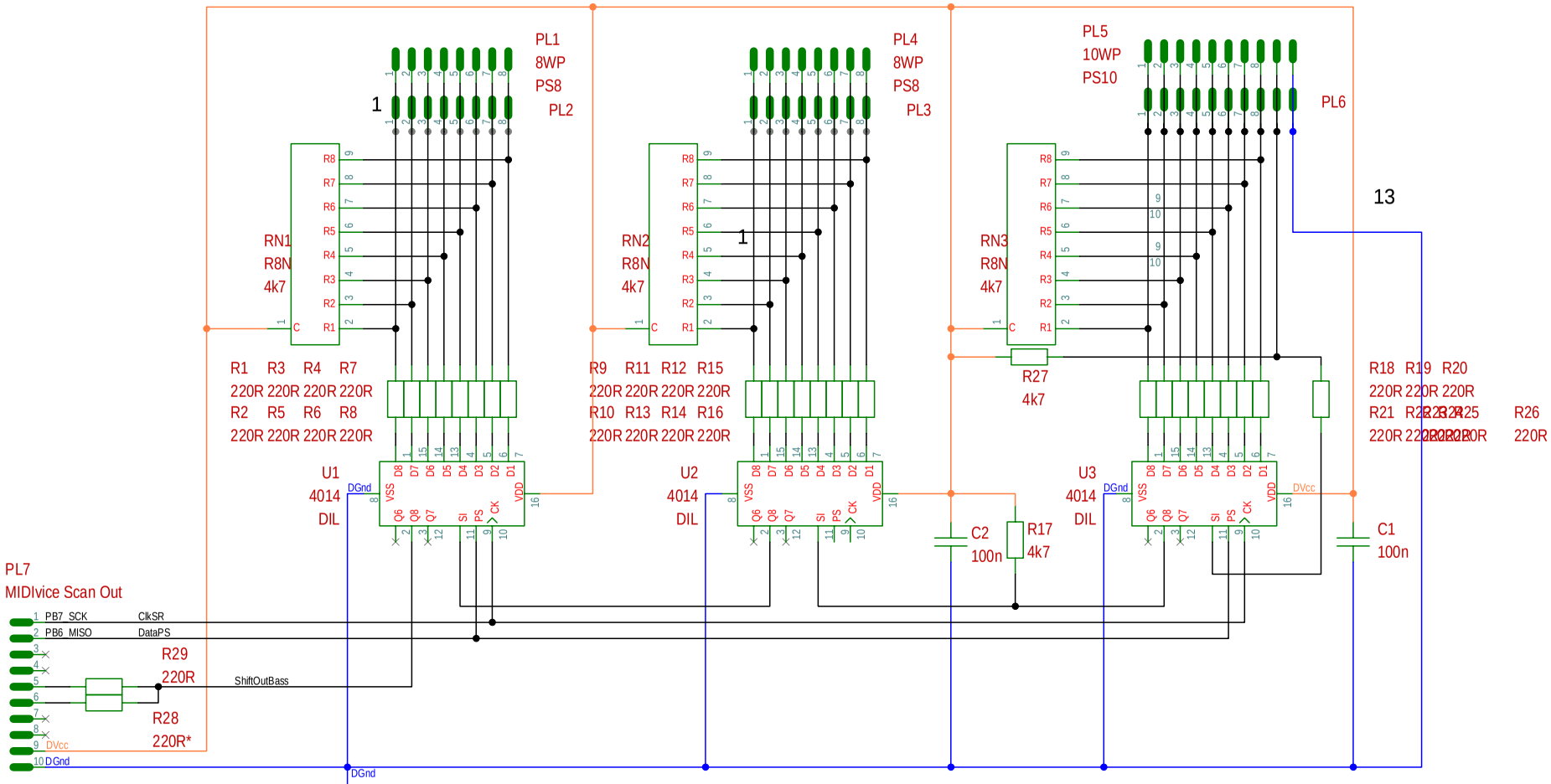

HOAX BASS 25

#1.2 (cm)